GRIPFIT PUSH-IN FITTINGS
SERIES 7000 - AUTOMATION

News

Tube external diameters: 4, 6, 8, 10, 12, 16 mm
Fittings threads: ISO-965 Metric parallel (M5, M7, M10x1, M12x1,25),
ISO-7 BSPT (R1/8, R1/4, R3/8, R1/2),
ISO-228 BSPP (G1/8, G1/4, G3/8, G1/2).

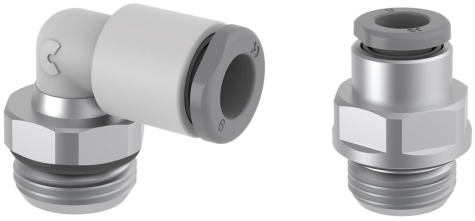

- Optimum sealing
- Maximum flow
- Compact and lightweight

Series 7000 Automation push-in fittings are made of reinforced technopolymer to meet the new market demands for reliability, ease of use and efficient solutions.
Their compact dimensions and lightweight make this new range of fittings ideal for most pneumatic applications associated with optimum gripping and sealing technologies.

ISO 14743:2020

Reach

RoHS

General Data

Diameter		Ø 4 mm	Ø 6 mm	Ø 8 mm	Ø 10 mm	Ø 12 mm	Ø 16 mm
Maximum working pressure	- 20° / + 40° + 40° / + 60° + 60° / + 80°	16 bar 16 bar 16 bar	16 bar 16 bar 16 bar	16 bar 14 bar 12 bar	16 bar 12 bar 10 bar	16 bar 10 bar 8 bar	16 bar 10 bar 8 bar
Minimum working pressure	-0,9 bar						
Temperature [°C]	-20 ÷ +80 (see characteristics of tubes used)						
Threads	Cylindrical gas ISO-228 BSPP Conical gas ISO-7 BSPT (with pre-applied PTFE sealant) ISO-965 Metric parallel						
Connecting tube	Polyurethane (PU), Polyethylene (PE), Polyamide (PA), Fluoropolymer (PTFE), Polyester (HY3L), rigid metal pipe with smooth grooved metal end						
Fluid	Compressed air (for other fluids consult our technicians)						
Materials	(A) Body = Technopolymer (PA66), Nickel-plated brass (B) Button = Technopolymer (PA66) (C) Gripping ring = Stainless steel (AISI 301) (D) Seals = NBR (E) Thread = Nickel-plated brass						

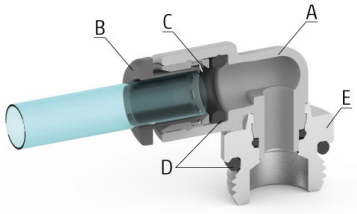

Products designed for industrial applications. General terms and conditions for sale are available on www.camozzi.com
This document contains a description of the products offered by Camozzi Automation at time of publication.
For more complete and up to date information about the Camozzi Automation product range, please refer to our online catalogue at https://shop.camozzi.com

Equal and unequal union elbow Mod. G7550



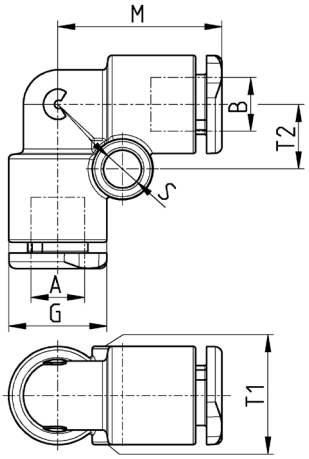

Mod.	A	B	G	M	S	T1	T2	Weight [g]
G7550 4	4	4	9,2	17	4	9,2	6,5	4
G7550 4-6	4	6	11,4	19	4	11,4	7,5	5
G7550 6	6	6	11,4	19	4	11,4	7,5	6
G7550 6-8	6	8	13,7	21,5	4	13,7	8,5	8
G7550 8	8	8	13,7	21,5	4	13,7	8,5	9
G7550 8-10	8	10	16,3	25	4	16,3	8	14
G7550 10	10	10	16,3	25	4	16,3	8	12
G7550 10-12	10	12	20	31	4	20	9,6	16
G7550 12	12	12	20	31	4	20	9,6	15
G7550 16	16	16	27	38	-	27	-	23

Equal and unequal union tee Mod. G7540



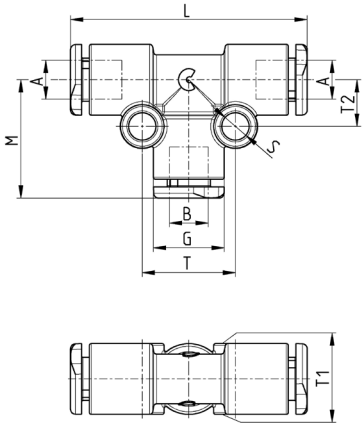

Mod.	A	B	G	L	M	S	T	T1	T2	Weight [g]
G7540 4	4	4	9,2	34	17,5	4	12	9,2	6,5	6
G7540 6	6	6	11,4	38	19	4	15	11,4	7,5	9
G7540 6-6-4	6	4	11,4	38	19	4	15	11,4	7,5	8
G7540 8	8	8	13,7	43	21	4	17	13,7	8,5	14
G7540 8-8-4	8	4	13,7	43	21	4	17	13,7	8,5	12
G7540 8-8-6	8	6	13,7	43	21	4	17	13,7	8,5	13
G7540 10	10	10	16,3	50	25	4	16	16,3	8	16
G7540 10-10-8	10	8	16,3	50	25	4	16	16,3	8	18
G7540 12	12	12	20	62	31	4	19,2	20	9,6	28
G7540 12-12-10	12	10	20	62	31	4	19,2	20	9,6	31
G7540 16	16	16	27	76	38	-	-	-	-	58
G7540 16-16-12	16	12	27	76	38	-	-	-	-	62

Products designed for industrial applications. General terms and conditions for sale are available on www.camozzi.com
This document contains a description of the products offered by Camozzi Automation at time of publication.
For more complete and up to date information about the Camozzi Automation product range, please refer to our online catalogue at https://shop.camozzi.com