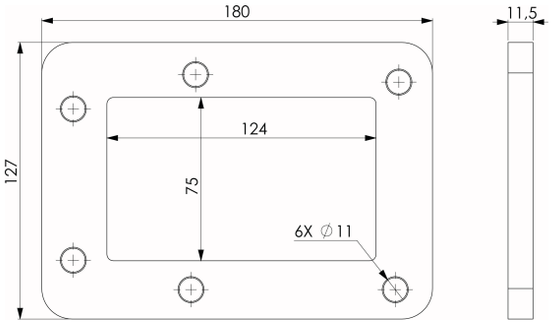

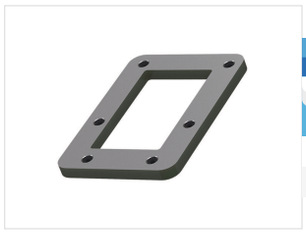

11MM MITSUBISHI EURO PLEYT

Ürün Kodu	Ağırlık
Product Code	Weight
	Kg
02PLT2101	0,9

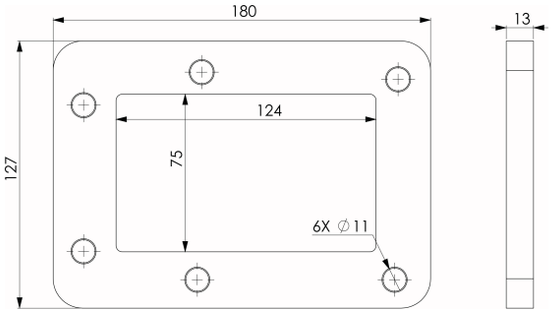



13MM MITSUBISHI EURO PLEYT

Ürün Kodu	Ağırlık
Product Code	Weight
	Kg
02PLT2102	1,3

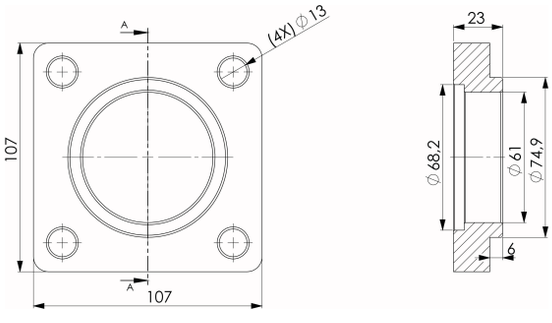

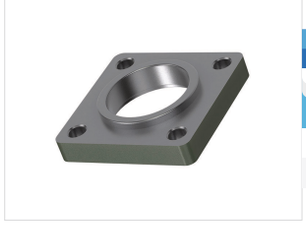

18.40 AXOR KARE PLEYT

Ürün Kodu	Ağırlık
Product Code	Weight
	Kg
02PLT0400	0,85

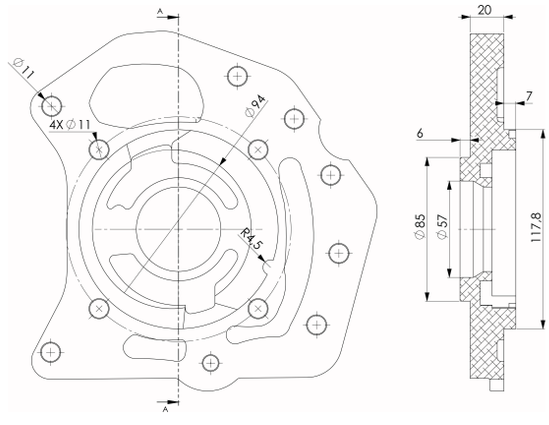



3228 AXOR ALÜMİNYUM PLEYT

Ürün Kodu	Ağırlık
Product Code	Weight
	Kg
02PLT0100	1,5

All orginal numbers, mark and models from vehicle manufactures listed in catalogue are for comparison purposes only. And may not used invoices to vehicle owners.